SECTION WT
ROAD WHEELS & TIRES

CONTENTS

PREPARATION 2
Commercial Service Tools 2
NOISE, VIBRATION AND HARSHNESS (NVH) TROUBLESHOOTING 3
NVH Troubleshooting Chart 3
ROAD WHEEL 4
Inspection 4
ALUMINUM WHEEL 4
STEEL WHEEL 4
ROAD WHEEL TIRE ASSEMBLY 5
Balancing Wheels (Bonding Weight Type) 5
REMOVAL 5
WHEEL BALANCE ADJUSTMENT 5
Rotation 6
SERVICE DATA AND SPECIFICATIONS (SDS) 7
Road Wheel 7
Tire 7

PREPARATION

PFP:00002

Commercial Service Tools

AES000XX

Tool name	Description
Power tool 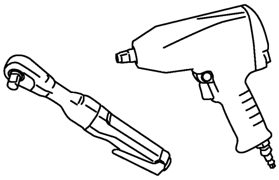 PBIC0190E	Removing wheel nuts

NOISE, VIBRATION AND HARSHNESS (NVH) TROUBLESHOOTING

PFP:00003

NVH Troubleshooting Chart

AES000XW

Use the chart below to help you find the cause of the symptom. If necessary, repair or replace these parts.

Reference page			FAX-7, FSU-6	WT-4	—	—	—	—	—	—	NVH in PR section	NVH in RFD section	NVH in FAX and FSU sections	NVH in RAX and RSU sections	Refer to TIRES in this chart	Refer to ROAD WHEEL in this chart	NVH in FAX, RAX section	NVH in BR section	NVH in PS section
Possible cause and SUSPECTED PARTS			Improper installation, looseness	Out-of-round	Imbalance	Incorrect tire pressure	Uneven tire wear	Deformation or damage	Non-uniformity	Incorrect tire size	PROPELLER SHAFT	DIFFERENTIAL	FRONT AXLE AND FRONT SUSPENSION	REAR AXLE AND REAR SUSPENSION	TIRES	ROAD WHEEL	DRIVE SHAFT	BRAKE	STEERING
Symptom	TIRES	Noise	×	×	×	×	×	×	×		×	×	×	×		×	×	×	×
		Shake	×	×	×	×	×	×		×	×		×	×		×	×	×	×
		Vibration				×				×	×		×	×			×		×
		Shimmy	×	×	×	×	×	×	×	×			×	×		×		×	×
		Judder	×	×	×	×	×	×		×			×	×		×		×	×
		Poor quality ride or handling	×	×	×	×	×	×		×			×	×		×			
	ROAD WHEEL	Noise	×	×	×			×			×	×	×	×	×		×	×	×
		Shake	×	×	×			×			×		×	×	×		×	×	×
		Shimmy, judder	×	×	×			×					×	×	×			×	×
		Poor quality ride or handling	×	×	×			×					×	×	×				

×: Applicable

ROAD WHEEL

PFP:40300

Inspection

AES000XR

ALUMINUM WHEEL

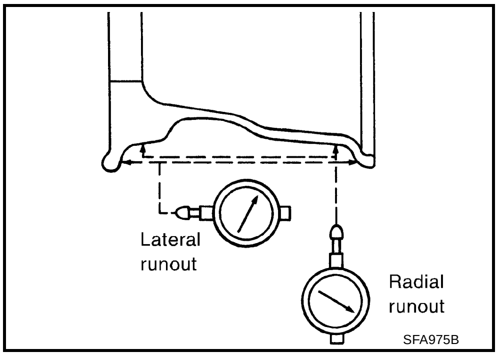

1. Check tires for wear and improper inflation.
2. Check wheels for deformation, cracks and other damage. If deformed, remove wheel and check wheel runout.
a. Remove tire from aluminum wheel and mount on a tire balance machine.
b. Set dial indicator as shown in the figure.

Wheel runout (Dial indicator value):

Refer to WT-7, "SERVICE DATA AND SPECIFICATIONS (SDS)"

STEEL WHEEL

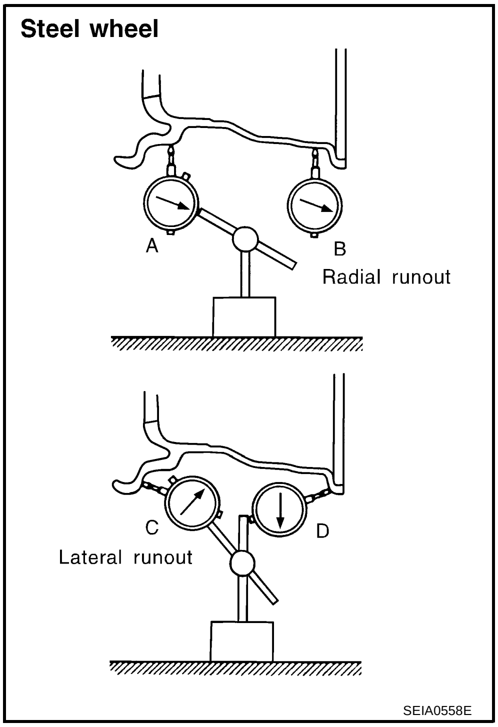

1. Check tires for wear and improper inflation.
2. Check wheels for deformation, cracks and other damage. If deformed, remove wheel and check wheel runout.
a. Remove tire from steel wheel and mount wheel on a tire balance machine.
b. Set two dial indicators as shown in the figure.
c. Set each dial indicator to 0.
d. Rotate wheel and check dial indicators at several points around the circumference of the wheel.
e. Calculate runout at each point as shown below.

Radial runout = (A + B)/2

Lateral runout = (C + D)/2

f. Select maximum positive runout value and the maximum negative value.
Add the two values to determine total runout.
In case a positive or negative value is not available, use the maximum value (negative or positive) for total runout.
If the total runout value exceeds the limit, replace steel wheel.

Wheel runout : Refer to WT-7, "SERVICE DATA AND SPECIFICATIONS (SDS)"

ROAD WHEEL TIRE ASSEMBLY

PFP:40300

Balancing Wheels (Bonding Weight Type)

AES000XS

REMOVAL

1. Remove inner and outer balance weights from the road wheel.

   CAUTION:

   Be careful not to scratch the road wheel during removal.
2. Using releasing agent, remove double-faced adhesive tape from the road wheel.

   CAUTION:

   - **Be careful not to scratch the road wheel during removal.**
   - **After removing double-faced adhesive tape, wipe clean traces of releasing agent from the road wheel.**

WHEEL BALANCE ADJUSTMENT

- If a tire balance machine has adhesion balance weight mode settings and drive-in weight mode setting, select and adjust a drive-in weight mode suitable for road wheels.

1. Set road wheel on wheel balancer using the center hole as a guide. Start the tire balance machine.
2. When inner and outer unbalance values are shown on the wheel balancer indicator, multiply outer unbalance value by 5/3 to determine balance weight that should be used. Select the outer balance weight with a value closest to the calculated value above and install it to the designated outer position of, or at the designated angle in relation to the road wheel.

   CAUTION:

   - **Do not install the inner balance weight before installing the outer balance weight.**
   - **Before installing the balance weight, be sure to clean the mating surface of the road wheel.**

   Indicated unbalance value × 5/3 = balance weight to be installed
   Calculation example:
   23 g (0.81 oz) × 5/3 = 38.33 g (1.35 oz) = 40 g (1.41 oz) balance weight (closer to calculated balance weight value)
   Note that balance weight value must be closer to the calculated balance weight value.
   Example:
   37.4 = 35 g (1.23 oz)
   37.5 = 40 g (1.41 oz)

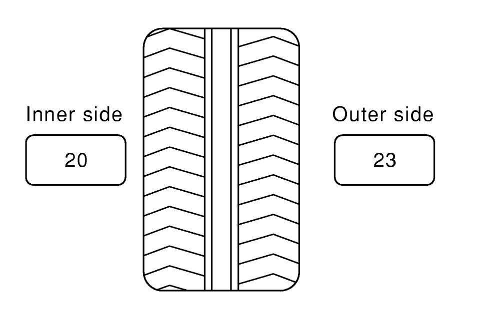

SMA054D

a. Install balance weight in the position shown in the figure.

b. When installing balance weight to road wheels, set it into the grooved area on the inner wall of the road wheel as shown in the figure so that the balance weight center is aligned with the wheel balancer indication position (angle).

   CAUTION:

   - **Always use genuine Nissan adhesion balance weights.**
   - **Balance weights are unreusable; always replace with new ones.**
   - **Do not install more than three sheets of balance weights.**

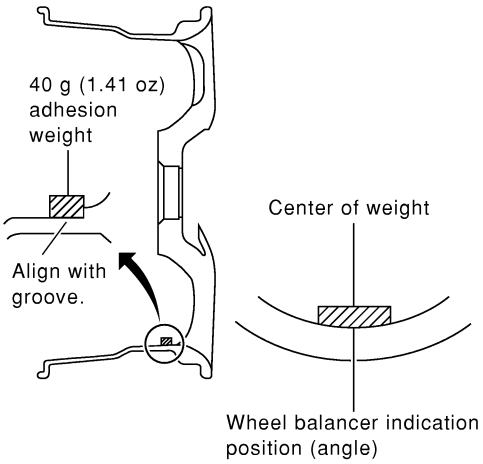

SEIA0271E

c. If calculated balance weight value exceeds 50 g (1.76 oz), install two balance weight sheets in line with each other (as shown in the figure).

CAUTION:

Do not install one balance weight sheet on top of another.

3. Start wheel balancer again.
4. Install drive-in balance weight on inner side of road wheel in the wheel balancer indication position (angle).

CAUTION:

Do not install more than two balance weights.

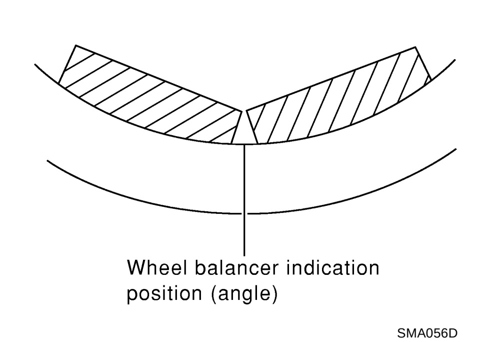

5. Start wheel balancer. Make sure that inner and outer residual unbalance values are 10 g (0.35 oz) each or below.
   - If either residual unbalance value exceeds 10 g (0.35 oz), repeat installation procedures.

Wheel balance (Maximum allowable unbalance):

Maximum allowable unbalance	Dynamic (At rim flange)	Less than 10 g (0.35 oz) (one side)
	Static (At rim flange)	Less than 20 g (0.70 oz)

Rotation

AES000XT

- Follow the maintenance schedule for tire rotation service intervals. Refer to MA-6, "PERIODIC MAINTENANCE" .
- Do not include the spare tire when rotating tires.

CAUTION:

When installing wheels, tighten them diagonally by dividing the work two to three times in order to prevent the wheels from developing any distortion.

Tightening torque of wheel nut:

113 N·m (12 kg-m, 83 ft-lb)

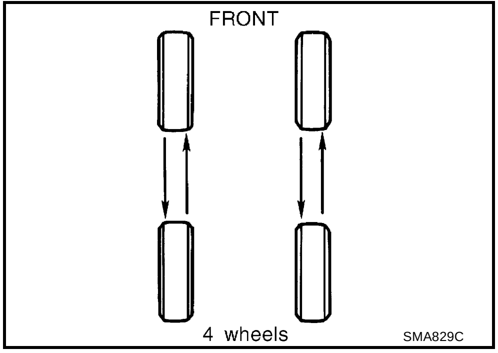

SERVICE DATA AND SPECIFICATIONS (SDS)

PFP:00030

Road Wheel

AES000XU

Kind of wheel		Aluminum	Steel
Deflection limit	Lateral deflection	Less than 0.3 mm (0.012 in)	Less than 0.5 mm (0.020 in)
	Vertical deflection	Less than 0.3 mm (0.012 in)	Less than 0.8 mm (0.031 in)
Allowable quantity of residual unbalance	Dynamic (At rim flange)	Less than 10 g (0.35 oz) (per side)	
	Static (At rim flange)	Less than 20 g (0.70 oz)	

Tire

AES000XV

Unit: kPa (kg/cm^2 , psi)

Tire size	Air pressure	
	Front tire	Rear tire
P215/65R16 96H	220 (2.2, 32)	220 (2.2, 32)
P215/60R17 95H	200 (2.0, 29)	200 (2.0, 29)